Deluxe Hideaway
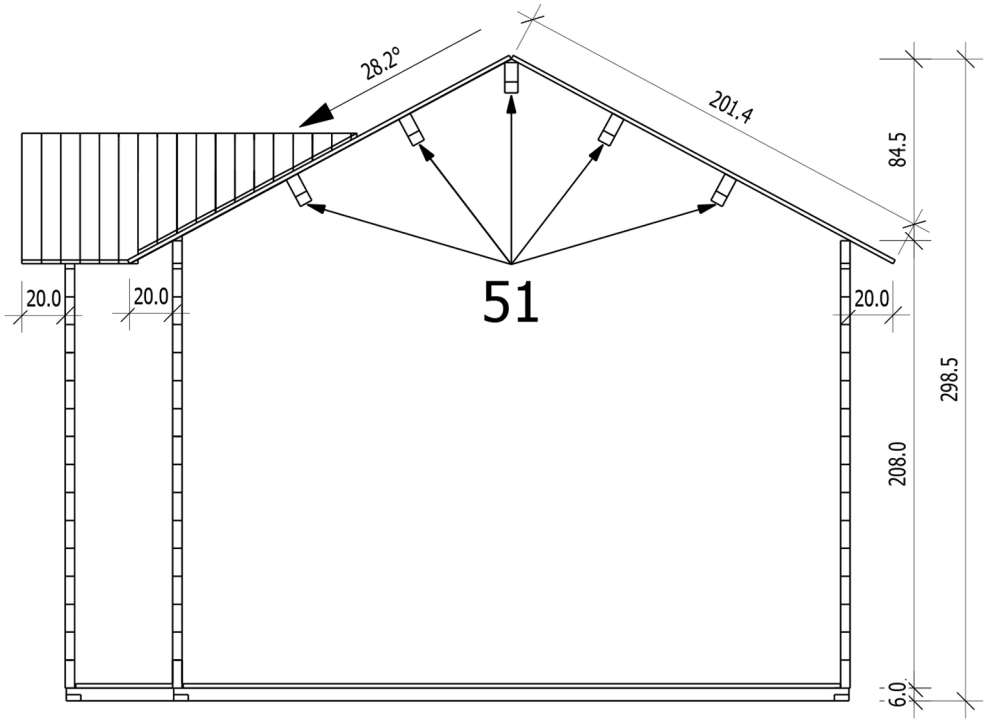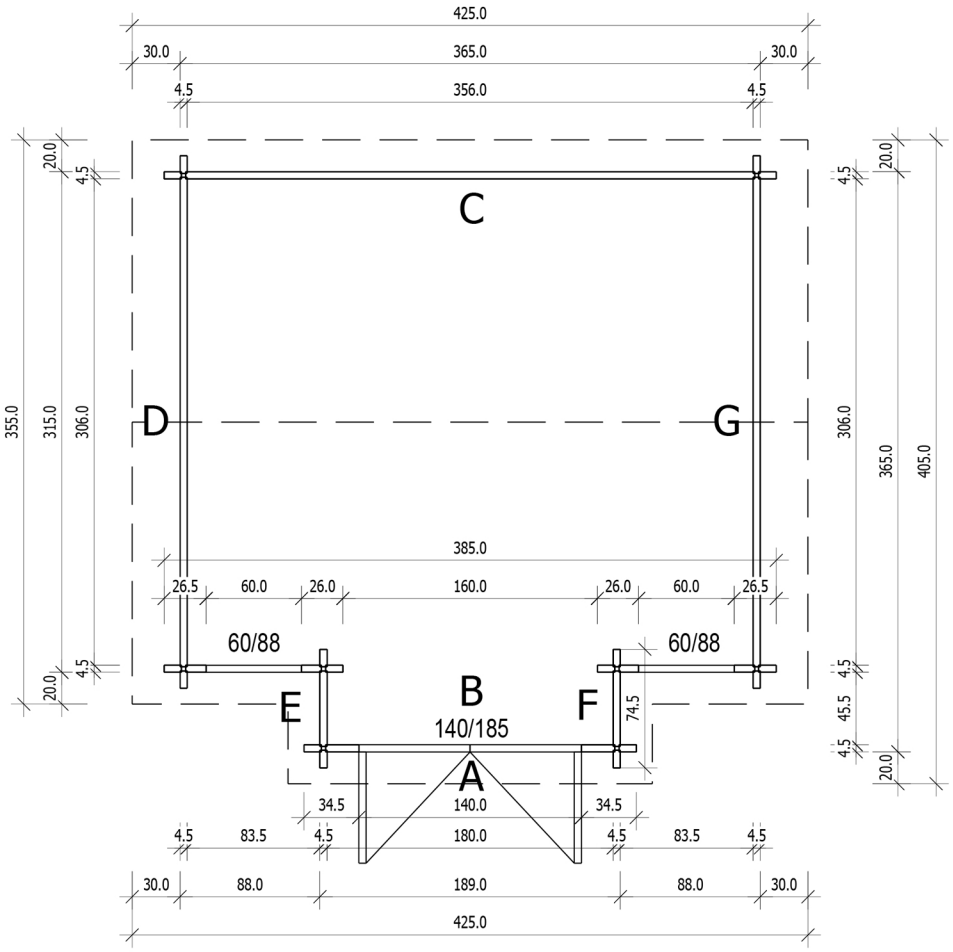
Sizes from 3.3m